NorthAmCon, LLC

+1 (989) 358-6119
sales@northamcon.com

Nor+ FLEX UHMW SIDE GUIDES

Flexible Side Guides prevent packages from falling off the edges of the conveyor. Flexible Side Guides are made of heavy-duty, durable UHMW material. Available in single and dual zone assemblies, side guides can be ordered to cover custom lengths of the conveyor to meet your needs.

STANDARD FEATURES:

- Durable UHMW Material
- 4" Overall Height, Extends 3" Above and 1" Below the Top of Roller
- Quickly Attaches and Detaches from Legs Via Pins

ASSEMBLY OPTIONS:

- Single Zone Side Guide – Used to Cover One Zone, Infeed, or Intermediate
- Dual Zone Side Guide – Used to Cover Two Zones, Infeeds, or Intermediates
- Discharge Zone Side Guide – Used to Cover the Discharge Zone of the Conveyor
- Removable Handle Weldment – An Additional Removable Handle Weldment Will Need to Be Purchased for Both Sides of Each Covered Zone

Figure 1:
Powered Flex Conveyor with UHMW Side Guides and Model 18 Handles

INFEED, INTERMEDIATE, AND DISCHARGE ZONES:

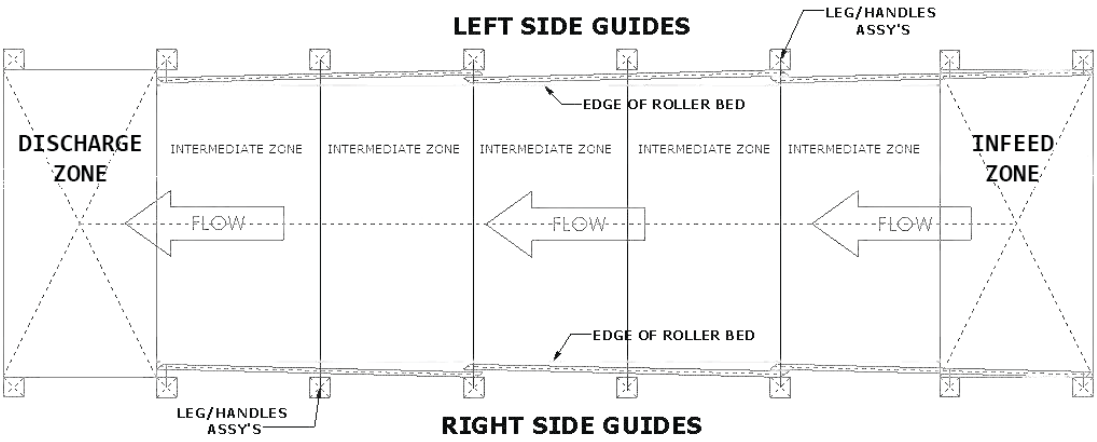

NorthAmCon, LLC
PO Box 454 | Alpena, MI 49707

LOW **MAINTENANCE,** HIGH **ADAPTABILITY**

NorthAmCon, LLC

+1 (989) 358-6119
sales@northamcon.com

SINGLE ZONE SIDE GUIDE ASSEMBLY

- Covers Approximately One Zone: Infeed or Intermediate
- Approximate Expanded Length: 37.9"
- Works on the Inside and Outside of Curved Section of Nor+ Flex Conveyor
- Expands, Collapses, and Flexes with the Conveyor
- Configurable for Direction of Flow
- Includes One Removable Handle Weldment

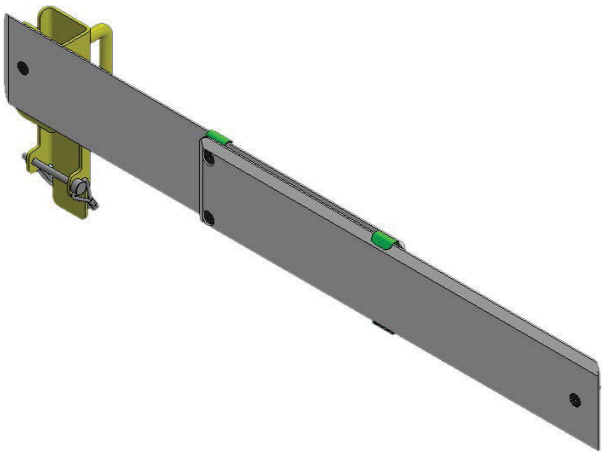

DUAL ZONE SIDE GUIDE ASSEMBLY

- Covers Approximately Two Zones: Infeed or Intermediate
- Approximate Expanded Length: 76.2"
- Works on the Inside and Outside of Curved Section of Nor+ Flex Conveyor
- Expands, Collapses, and Flexes with the Conveyor
- Configurable for Direction of Flow
- Includes Two Removable Handle Weldments

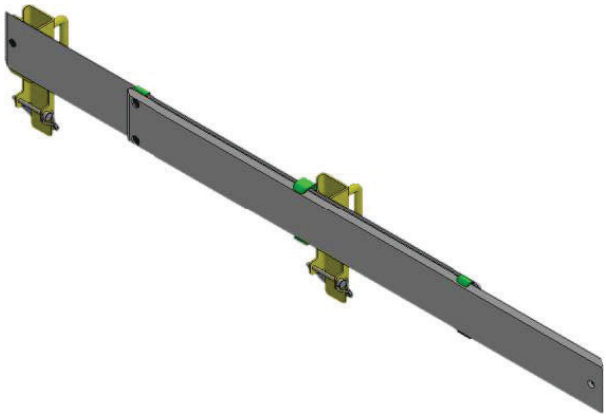

DISHCARGE ZONE SIDE GUIDE ASSEMBLY

- Covers Approximatively One Discharge Zone
- Approximate Length: 27"
- Fixed Guide, Not Adjustable for Movement
- Includes One Removable Handle Weldment

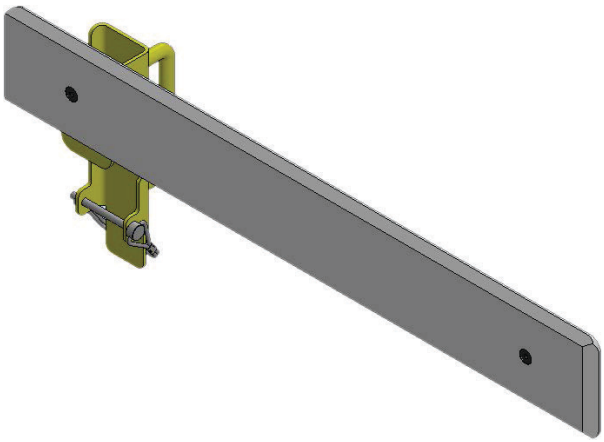

NorthAmCon, LLC

+1 (989) 358-6119
sales@northamcon.com

HOW TO ORDER

UHMW side guides can be purchased to cover individual sections of the conveyor or the full length of the unit. Regardless of the assembly that is purchased, one additional end handle will need to be purchased to complete the stack or line of Side Guide example see Figure 2. The side guides can be "stacked" or connected in line.

Part Number	Model	Zone	Description
FXAC-SG3-BL	Side Guide Assembly	Discharge Zone	Covers the Fixed Discharge Zone of the Flex Conveyor
FXAC-SG3-DL	Side Guide Assembly	Dual Zone	Covers Two Zones of the Flex Conveyor
FXAC-SG3-SL	Side Guide Assembly	Single Zone	Covers One Zone of the Flex Conveyor
FXSG-RH-W-V1	Removable Handle Weldment for Model 18 Style Handles		Required End Handle to Complete Installation of Side Guides
FXSG-RH-W	Removable Handle Weldment for Model 17 Style Handles		Required End Handle to Complete Installation of Side Guides

EXAMPLE

The following parts are required for (1) Dual Zone Assembly for a Nor+ Powered Flex Conveyor Sides Guides with Model 18 handles

(1) **FXAC-SG3-DL** - Side Guide Assembly, Dual Zone

(1) **FXSG-RH-W-V1** - Removable Handle Weldment

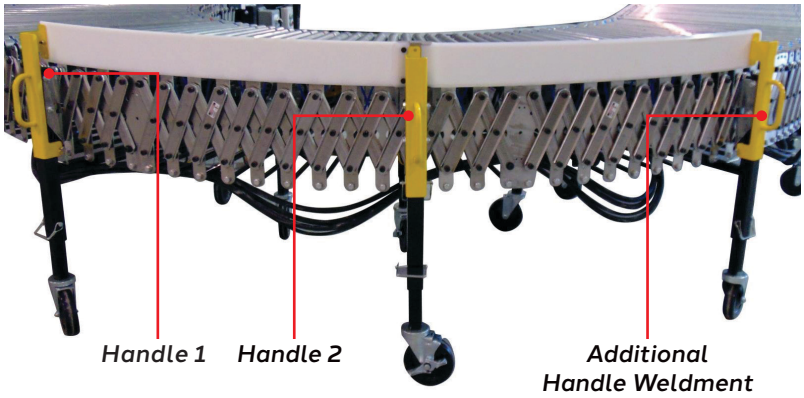

Figure 2:
Dual Zone Assembly for a Powered Flex Conveyor with Model 17 handles

HANDLE STYLES

Figure 3:
Model 17 Handle

Figure 4:
Model 18 Handle

+1 (989) 358-6119
sales@northamcon.com

HOW TO INSTALL

To install "stacked" side guides, loosen the handle on the side guide nearest where the next side guide will attach or where there is no handle on the next Side Guide, see Figure 5. Attach all side guides together in this manner. If installing consecutive units, install the additional removable handle weldment at the end of the last unit, see Figure 6 reference.

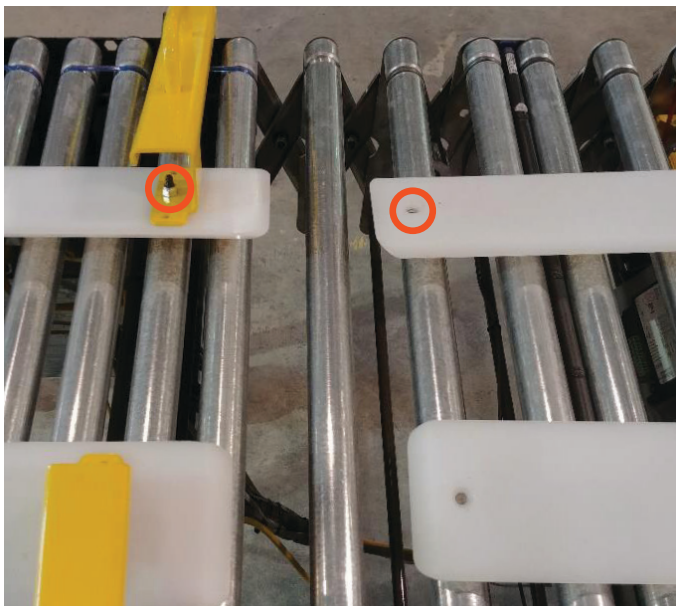

Figure 5:
Side Guide Attachment Points

○ Attachment Point

Figure 6:
Side Guide Installation

○ Attachment Point

△ Additional Handle Weldment